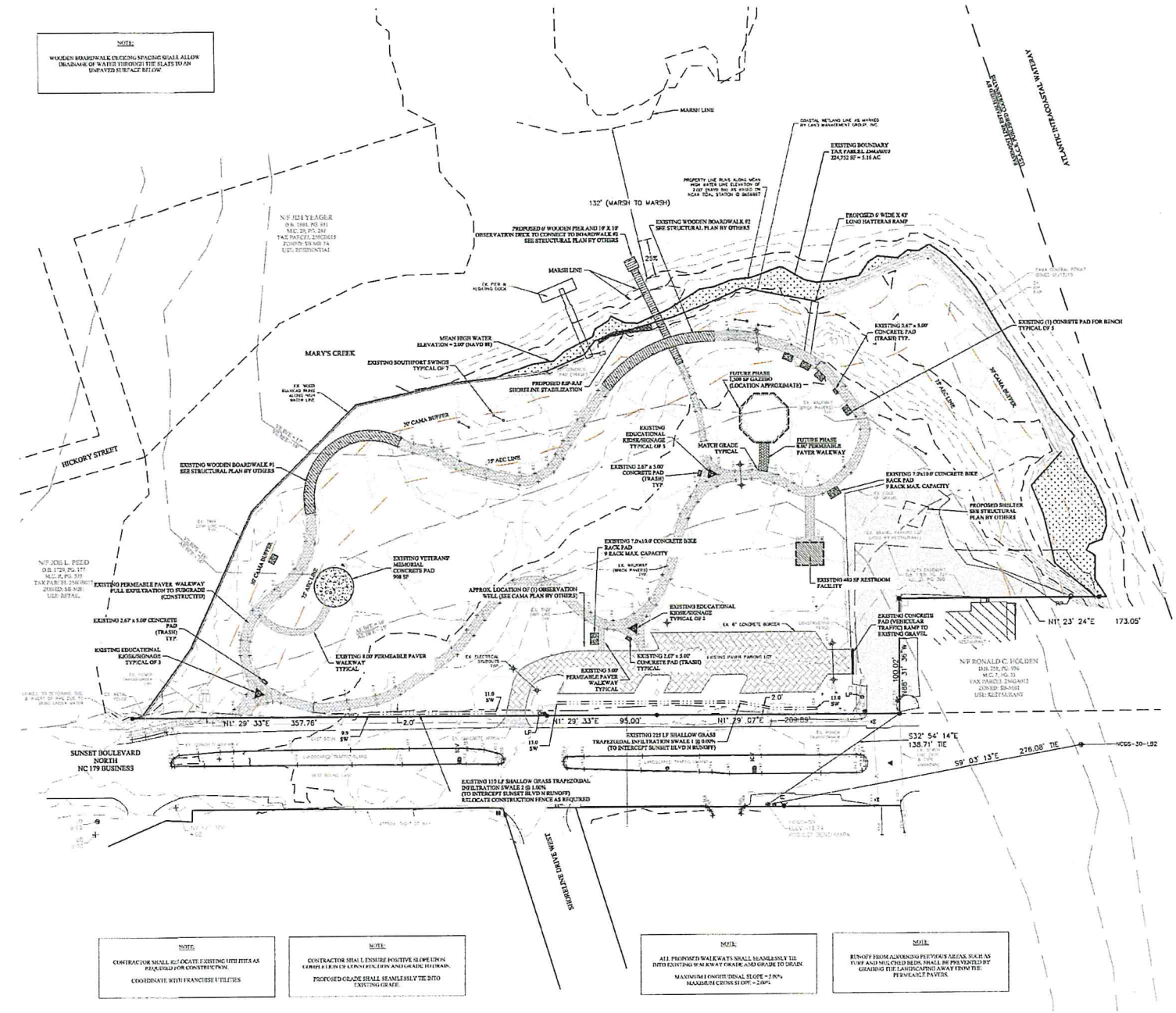

NOTE:
CONTRACTOR SHALL RELOCATE EXISTING UTILITIES AS REQUIRED FOR CONSTRUCTION.
COORDINATE WITH FRANCHISE UTILITIES

NOTE:
CONTRACTOR SHALL ENSURE POSITIVE SLOPE UPON COMPLETION OF CONSTRUCTION AND GRADE TO DRAIN.
PROPOSED GRADE SHALL SEAMLESSLY TIE INTO EXISTING GRADE.

NOTE:
ALL PROPOSED WALKWAYS SHALL SEAMLESSLY TIE INTO EXISTING WALKWAY GRADE AND GRADE TO DRAIN.
MAXIMUM LONGITUDINAL SLOPE = 5.00%
MAXIMUM CROSS SLOPE = 2.00%

NOTE:
RUNOFF FROM ADJOINING PREVIOUS AREAS, SUCH AS TURF AND MULCHED BEDS, SHALL BE PREVENTED BY GRADING THE LANDSCAPING AWAY FROM THE PERMEABLE PAVERS.

HATCH LEGEND

- PROPOSED PERMEABLE PAVER WALKWAY (GAZEBO)
- EXISTING PERMEABLE PAVER WALKWAY
- EXISTING CONCRETE PAD
- EXISTING ELEVATED WOODEN BOARDWALK

REVISED POST DEVELOPMENT SITE AREAS

LAND USE	%	AREA (SF)	AREA (AC)
PERVIOUS	88	197,624	4.54
WOODEN BOARDWALK	1	2,438	0.05
SUB-TOTAL	89	200,062	4.59
IMPERVIOUS			
FUTURE GAZEBO	1	1,500	0.03
RESTROOMS	0	480	0.01
KIOSKS	0	75	0.00
GRAVEL PARKING	6	14,067	0.32
PAVER PARKING LOT *	1	2,749	0.06
PAVER WALKWAY *△	1	3,229	0.07
CONCRETE BAND & APRON	0	478	0.01
CONCRETE BENCHES	0	230	0.01
CONCRETE PAD - MEMORIAL	0	908	0.02
CONCRETE PADS - UTILITIES	0	187	0.00
CONCRETE PADS - BIKE RACK	0	130	0.00
CONCRETE PADS - TRASH	0	68	0.00
FUTURE	0	583	0.01
SUB-TOTAL	11	24,690	0.57
TOTAL PROJECT AREA	100	224,752	5.16

*25% OF TOTAL IMPERVIOUS AREA PER BUA CREDIT
△INCLUDES FUTURE GAZEBO PERMEABLE PAVER WALKWAY

PREVIOUSLY APPROVED POST DEVELOPMENT SITE AREAS

LAND USE	%	AREA (SF)	AREA (AC)
PERVIOUS	88	196,839	4.52
NEW WOODEN BOARDWALK	1	3,223	0.07
SUB-TOTAL	89	200,062	4.59
IMPERVIOUS			
GAZEBO	1	1,500	0.03
RESTROOMS	0	480	0.01
KIOSKS	0	75	0.00
GRAVEL PARKING	6	14,067	0.32
PAVER PARKING LOT *	1	2,749	0.06
PAVER WALKWAY *	1	3,119	0.07
CONCRETE BAND & APRON	0	478	0.01
CONCRETE BENCHES	0	448	0.01
CONCRETE PAD - MEMORIAL	0	908	0.02
CONCRETE PADS - UTILITIES	0	187	0.00
CONCRETE PADS - BIKE RACK	0	140	0.00
CONCRETE PADS - TRASH	0	68	0.00
CONCRETE PADS - SWINGS	0	135	0.01
SUB-TOTAL	11	24,690	0.57
TOTAL PROJECT AREA	100	224,752	5.16

*25% OF TOTAL IMPERVIOUS AREA PER BUA CREDIT

Revisions
03-09-2017 Revised per Town request
04-26-2017 Revised per Town request

East Coast Engineering & Surveying, P.C.
ENGINEERS • PLANNERS • SURVEYORS
Phone: 910.754.8029
Fax: 910.754.8049
4910 Main Street
Post Office Box 2449
Shallotte, North Carolina 28459
Firm License Number C-3014

STORMWATER PLAN REVISION FOR SUNSET BEACH TOWN PARK

SUNSET BEACH, NORTH CAROLINA

Date: 4-1-17
Scale: 1" = 40'
Drawn By: KMC/MW
Checked By: ALB/RCJ

THIS PLAN IS NOT ISSUED FOR CONSTRUCTION WITHOUT AFFIXED CORPORATE SEAL

C4.0

2013 This drawing shall not be reproduced in whole or in part without written permission of East Coast Engineering & Surveying, P.C.

ECES PROJECT NO. 2F0019

STRUCTURAL NOTES

1. ALL WORK TO COMPLY WITH THE N.C. STATE RESIDENTIAL CODE 2012 EDITION.
2. DESIGN LOADS: DECK DEAD LOAD = 10 PSF
   DECK LIVE LOAD = 100 PSF
   WIND VELOCITY = 130 MPH PER ASCE 7-10 N.C.B.C.
3. ALL LUMBER TO BE #1 GRADE SOUTHERN YELLOW PINE & PRESSURE TREATED. IN SPLASH ZONE, USE MIN. 0.6 PCF MATERIAL PER AWPA U1, 4C USE CATEGORY.
4. ALL PILES TO BE TREATED ROUND WITH MIN. 8" Ø TIPS WITH MIN. PRESERVATIVE DENSITY 2.5 PCF OR SQUARE 8"x8" TREATED PILES WITH MIN. PRESERVATIVE DENSITY 2.5 PCF
5. CONTRACTOR TO VERIFY ALL DIMENSIONS SHOWN WITH FINAL PLANS PRIOR TO BEGINNING CONSTRUCTION. CONTRACTOR SHALL ALSO REVIEW ALL APPLICABLE CAMA & BUILDING SETBACK LINES AND RESTRICTIONS PRIOR TO BEGINNING CONSTRUCTION.
6. ALL HARDWARE SHALL BE HOT DIPPED GALVANIZED OR STAINLESS STEEL, FOR SALT WATER EXPOSURE.
7. PILE DEPTH SHALL BE MIN. 6'-0" DEEP INTO WATER FLOOR. SEE TYPICAL PIER SECTION DETAIL

* U.N.O. = UNLESS NOTED OTHERWISE

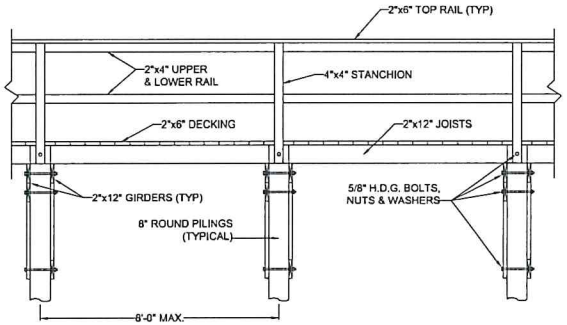

TYPICAL PIER ELEVATION
SCALE: 1/2" = 1'-0"

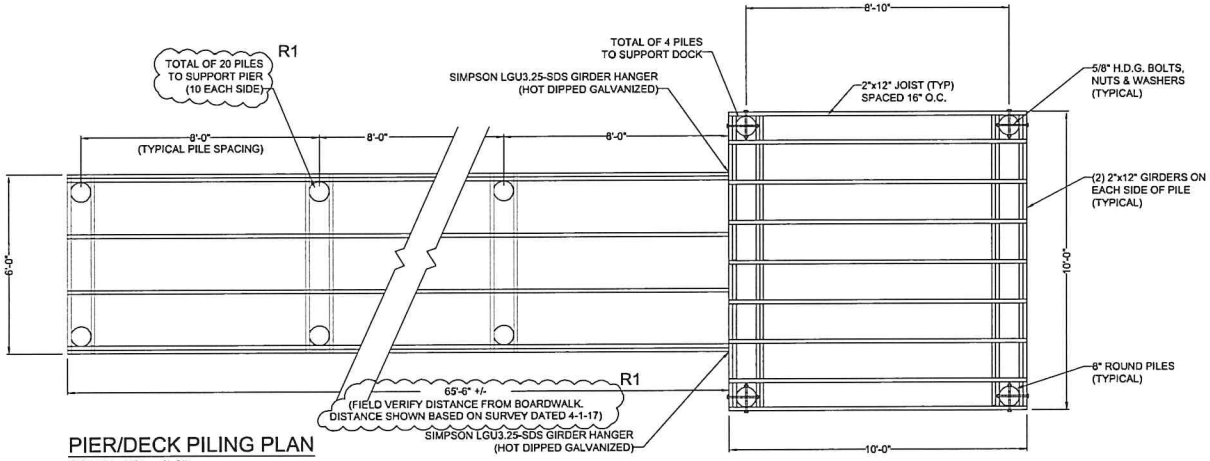

PIER/DECK PILING PLAN
SCALE: 1/2" = 1'-0"

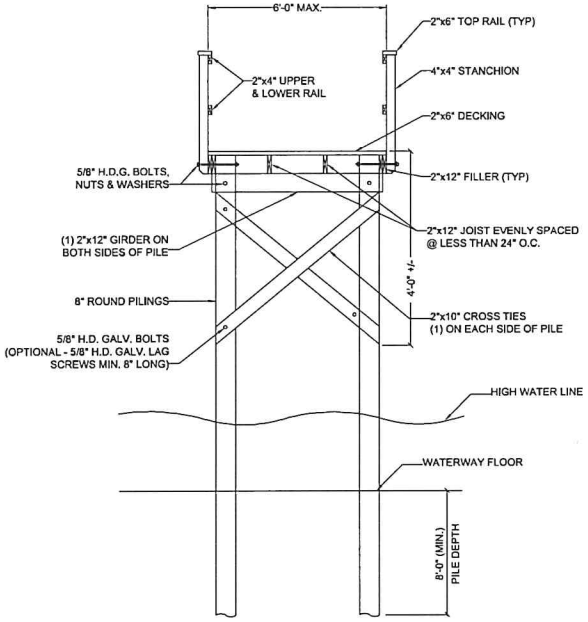

TYPICAL PIER SECTION
SCALE: 1/2" = 1'-0"

SYMBOL	DATE	REVISIONS	BY
R1	4/27/17	REVISE PER LOCAL BASED ON SURVEY	JL

© 2017 COASTAL RIVER ENGINEERING

TOWN PARK OBSERVATION DECK
PIER AND DECK PLAN

CLIENT:
TOWN OF SUNSET BEACH
700 Sunset Blvd N.

COASTAL RIVER ENGINEERING, PLLC
9222 Beach Drive
P.O. Box 4065
Phone: 910.575.4213
Fax: 910.575.7045

17032

DES. JLL
DKD. JLL
DRWN. DMB
DATE 04.1

S